Custom Dynamics® Low Profile BAGZ™ Saddlebag LED Lights Installation Instructions

We thank you for purchasing the Custom Dynamics® Low Profile BAGZ™ Saddlebag LED Lights. Our products utilize the latest technology and high quality components to ensure you the most reliable service. We offer one of the best warranty programs in the industry and we back our products with excellent customer support, if you have questions before or during installation of this product, please call Custom Dynamics® at 1(800) 382-1388.

Part Numbers:
CD-LP-SS8-R
CD-LP-SS8-S

Package Contents:

- Low Profile BAGZ™ Saddlebag LED Light (2)
- SS8 Y Harness Adapter w/ Plugs (1)
- 4" Cable Tie (10)
- Cable Tie Holder (6)

Fits: Harley-Davidson® 2009 Road Glide CVO™, 2010-2012 Street Glide CVO™, 2012-2013 Road Glide® Custom CVO™ and 2013 Road King CVO™ with H-D™ OEM hard saddlebags.

Note: Lights are designed to operate as Run/Brake. However, lights can be configured to operate as Run/Turn or Run/Brake/Turn.
See page 2 & 3 for alternative configurations.

⚠ ATTENTION ⚠

Disclaimer: Removal of our saddlebag lights after installation, may cause permanent damage to the finished surface area of the saddlebag.

Warning: Disconnect negative battery cable from battery; refer to owner's manual. Failure to do so may result in electrical shock, injury or fire. Secure negative battery cable away from positive side of battery and all other positive voltage sources on vehicle.

Safety First: Always wear appropriate safety gear including safety glasses when performing any electrical work. It is highly recommended that safety glasses be worn throughout this installation process. Be sure vehicle is on level surface, secure and cool.

Important: This product is designed and intended for use as auxiliary lighting only. It is NOT intended to replace any original equipment lighting installed on the vehicle and should not be used for that purpose. This product must be wired so that it does not interfere with any original equipment lighting.

Important: Ambient install temperature must be 60 degrees F or higher. Allow 24 hours for tape to cure before washing or prolonged use of vehicle.

Note: The Y Harness Adapter must be plugged into the output (behind) any Smart Signal Stabilizer™/load equalizer or any brake strobe modules.

Note: Lights are designed to operate as **Run/Brake**. However, lights can be configured to operate as Run/Turn or Run/Brake/Turn. **See page 2 &3 for alternative configurations.**

Installation:

1. Test fit the Saddlebag Lights, on each bag, the light should mount a couple millimeters below the bottom edge of the lid when the lid is closed. Mark the location with a grease pencil.
2. Clean area with denatured alcohol; allow to dry.
3. Remove the red adhesive backing and install the lights on the left and right saddlebags. Press into place making sure the adhesive tape is making contact with the saddle bag. **Note: Do not apply too much pressure in the center of the Low Profile BAGZ™ Saddle Bag Lights. This can cause the lens to crack and will not be covered under warranty.**
4. Remove both bags from the bike.
5. Clean the surface area locations for the tie wrap holders with denatured alcohol; allow to dry. Remove paper backing from the cable tie holders and press into place (see picture below).

6. Route wires from bag light to each cable tie holder location and secure with enclosed cable ties. Make sure wiring will not come in contact with moving parts or in an area with high heat. Also take care that wires will not get pinched or frayed.
7. Remove seat from bike. Locate rear main wire harness and unplug. **Note:** If installed, the order of modules should be Smart Signal Stabilizer™/load equalizer, brake strobe then **Y harness adapter.**
8. Plug SS8 harness adapter into rear wiring harness.
9. Reinstall saddlebags. Plug the female connector of each light into the male connector of the harness adapter. Connect 3 pin plugs from Bag Lights to Y adapter making sure female with purple wire plugs into male with purple wire, and female with brown wire plugs into male with brown Wire.
10. Secure wires with the included cable ties, make sure wiring will not come in contact with moving parts or in an area with high heat. Also take care that wires will not get pinched or frayed.
11. Reinstall seat. Test operation of running, brake and turn signal lights.

BAGZ™ come with plug and play weatherproof quick disconnect to make future removal of saddlebags quick and easy see pictures below.

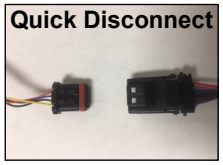

Questions? Call us at: 1 (800) 382-1388 M-TH 8:30AM-5:30PM / FR 9:30AM-5:30PM EST

Installation Instructions - Page 2.

Run-Brake-Turn modification with GEN-SMART-TPU-SS8

2010-2012 Street Glide® CVO™, 2009 Road Glide® CVO™, 2012-2013 Road Glide® Custom CVO™, 2013 Road King® CVO™

NOTE 1:

Cut and remove the 3 pin plug from each LED BAGZ™ light to expose the black, yellow, and brown (right side) or purple (left side) wires. Cap off the yellow wire from each BAGZ™ light. Connect the pigtail output wires from the Smart Triple Play® using the supplied Posi-Lock™ connectors to the exposed black and brown (right side) or (left side) purple wires on the Custom Dynamics® BAGZ™ LEDs.

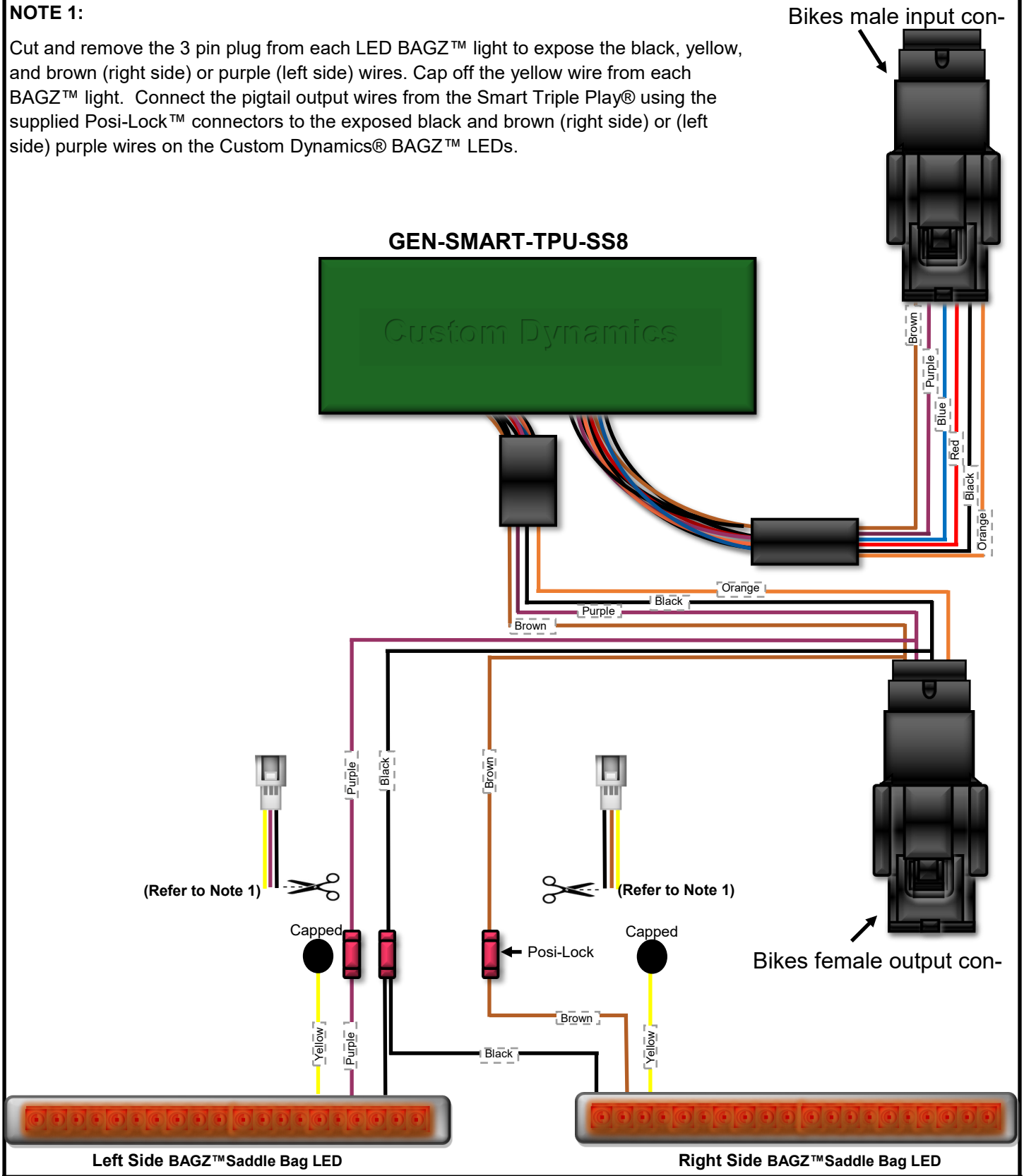

Questions? Call us at: 1 (800) 382-1388 M-TH 8:30AM-5:30PM / FR 9:30AM-5:30PM EST

Run-Turn Configuration
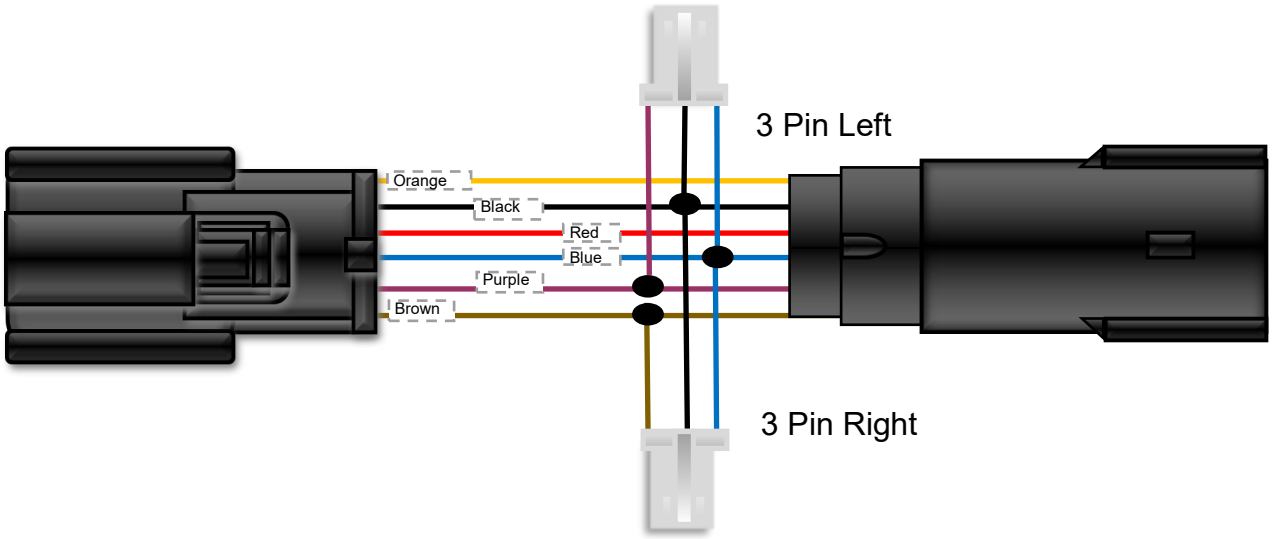
On the SS Y Harness Adapter, the Brown wire of the 3 pin connector should be cut where it meets the Red wire and relocated to Brown wire and Purple wire of the 3 pin connector should be cut where it meets the Red wire and relocated to Purple connector wire. Connections can easily be made using Posi-Tap™ connectors (*Sold Separately*) See photo below for reference.