Custom Dynamics® TruBEAM® LED Headlight Installation Instructions

We thank you for purchasing the Custom Dynamics® TruBEAM® LED Headlight. Our products utilize the latest technology and high quality components to ensure you the most reliable service. We offer one of the best warranty programs in the industry and we back our products with excellent customer support, if you have questions before or during installation of this product please call Custom Dynamics® at 1(800) 382-1388.

Part Numbers: CDTB-7-IF-B CDTB-7-IF-C

Package Contents:

- TruBEAM® LED Headlight (1)
- Instructions (1)

Fits: 2015-2025 Indian® Roadmaster, 2015-2021 Roadmaster Classic & Roadmaster Elite. 2015-2018 Chieftain, Chieftain Dark Horse & Chieftain Limited, 2015-2020 Cheiftain Classic.

Note: CDTB-HLA-1 Adapter Harness (sold separately) is required to enable low beam function during high beam operation and for the LED Halo.

⚠ ATTENTION ⚠

Please read all Information below before Installation

Warning: Disconnect negative battery cable from battery; refer to owner's manual. Failure to do so may result in electrical shock, injury, or fire. Secure negative battery cable away from positive side of battery and all other positive voltage sources on motorcycle.

Safety First: Always wear appropriate safety gear including safety glasses when performing any electrical work. It is highly recommended that safety glasses be worn throughout this installation process. Be sure motorcycle is on level surface, secure and cool.

Cleaning: Take special care in cleaning the finish. Never use abrasive polishes or cleaners as these can scratch and/or damage the finish. Avoid power washing/applying direct stream to aftermarket parts.

Note: Hand start all bolts, **DO NOT** use impact wrench/"zip gun" when installing.

Installation:

1. Remove necessary parts to disconnect the negative battery cable from the battery.
2. Remove OEM headlight from the motorcycle.
3. Connect the TruBEAM® LED Headlight to the H4 connector on the motorcycle. Shown in **Figure 1.**

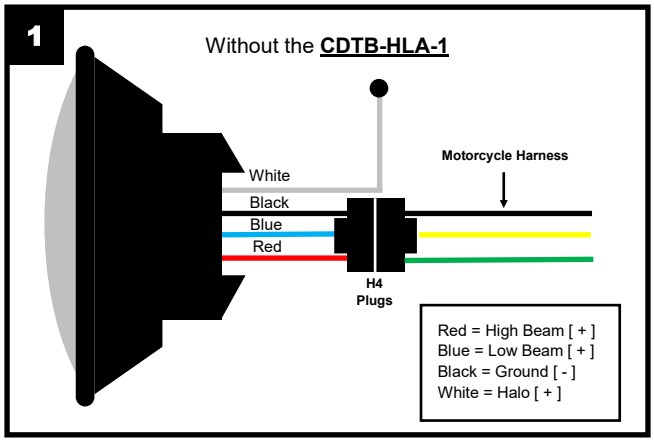

4. LED Halo **(optional),** locate the white wire on the back of the TruBEAM® LED Headlight and use CDTB-HLA-1 Adapter Harness **(sold separately).** Shown on **Page 2 Figure 3.**
5. Install the OEM retaining ring onto the TruBEAM® LED Headlight and use the supplied Retaining Ring Nylon Spacers and Mounting Screws. Shown on **Page 2 Figure 2.**
6. Reconnect the negative battery cable to the battery and reinstall all necessary parts.

Questions? Email: info@CustomDynamics.com or Call us at: 1 (800) 382-1388 M-TH 8:30AM-5:30PM / FR 9:30AM-5:30PM EST

09/2025

Installation Instructions - Page 2

Installation Continued:

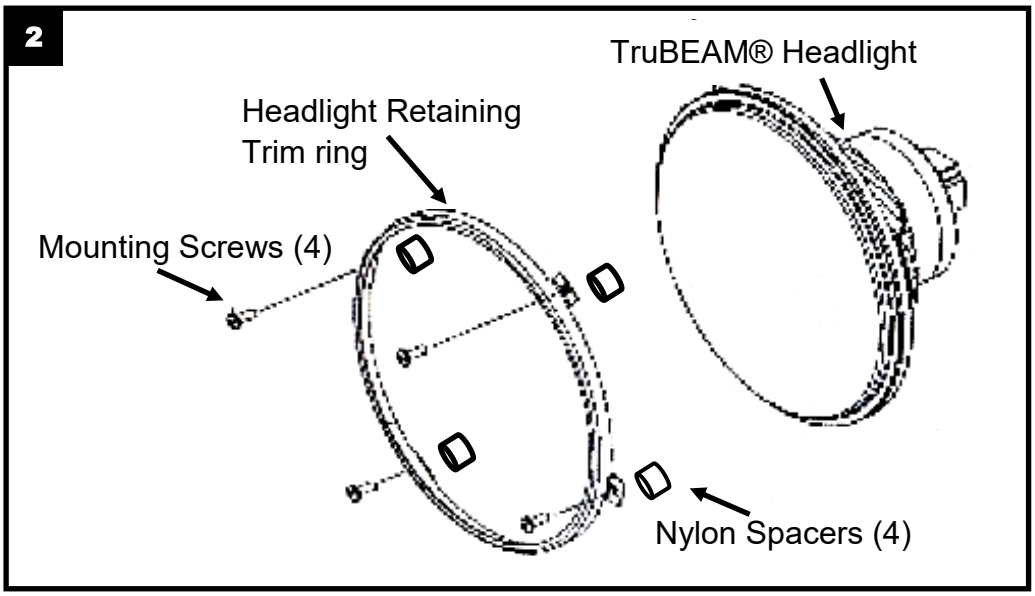

7. Test the Custom Dynamics® TruBEAM® LED Headlight for proper operation.
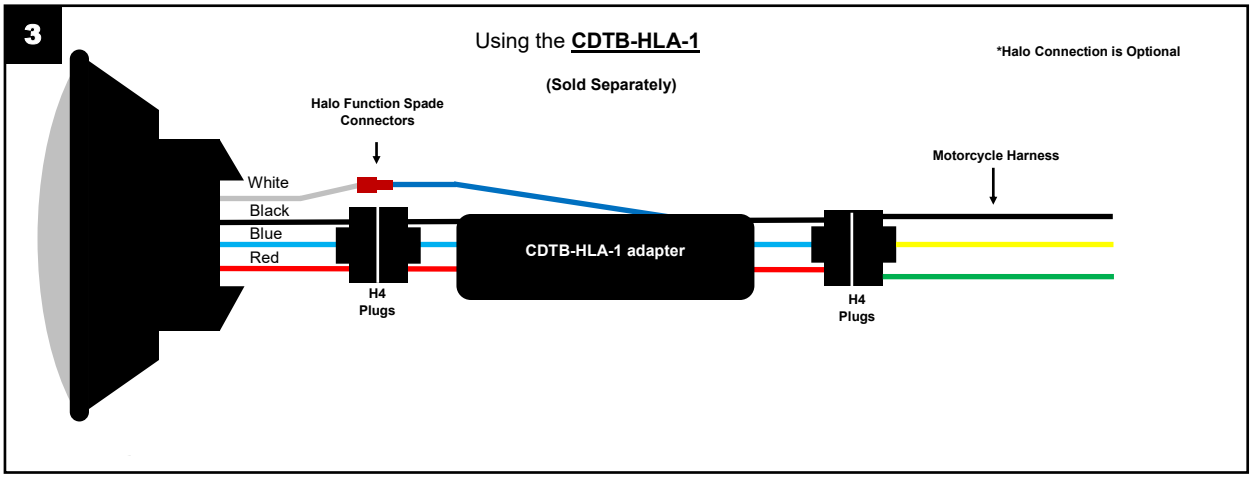
- **<u>Function without CDTB-HLA-1</u>:** When low beam is **ON**, high beam is **OFF**. When high beam is **ON**, low beam is **OFF**. Halo will **NOT** illuminate.
- **<u>Function with CDTB-HLA-1</u>:** When low beam is ON, high beam is OFF. When high beam is ON, low bean is ON. Shown in Figure 3.
- **<u>Halo Function</u>:** Halo will only work if connected running power is applied to the white wire, function is optional.