Custom Dynamics® LED Front Fender Tip Installation Instructions

We thank you for purchasing the Custom Dynamics® LED Front Fender Tip! Our products utilize the latest technology and high quality components to ensure you the most reliable service. We offer one of the best warranty programs in the industry and we back our products with excellent customer support, if you have questions before or during installation of this product please call Custom Dynamics® at 1(800) 382-1388.

Part Number: GEN-FT-(AA/AS/WC/WS)

Package Contents:

- LED Fender Tip
- Posi-Lock Connectors (2)
- Shrink Tubing (2)

Fits: 2014-2019 Harley-Davidson® Electra Glide Ultra Classic (FLHTCU), Electra Glide Ultra Classic Low (FLHTCUL), Ultra Limited (FLHTK), Ultra Limited Low (FLHTKL), 2014-2022 Road King (FLHR) and 2014-2024 Tri Glide Ultra (FLHTCUTG).

Replacement for OEM Part 59600003 and 59600006. Fender Tip Wiring Kit PN 2120-0887 (sold separately) required when installing on 2014-2022 Road King (FLHR), 2017-2019 Ultra Classic (FLHTCU) and 2020-2024 Tri Glide Ultra (FLHTCUTG) to extend wires when replacing stock chrome decorative piece.

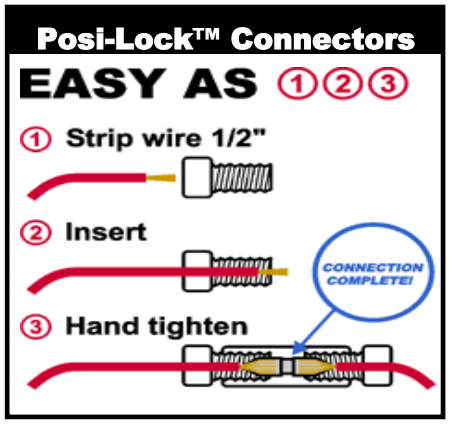

Installation

1. Remove negative [-] battery terminal from battery.
2. Remove fender tip assembly from the fender by removing the 2 lock nuts on the underside of the fender.
3. Once stock fender tip is off of fender, cut the wiring to the stock fender tip. Make sure you cut right at the inlet to the fender tip in order to give you maximum wire length to work with.
4. On the new fender tip wiring, Slide 1 piece of shrink tubing up to the base of the wiring, then attach the supplied Posi-Lock™ connectors to the positive and negative wires on the unit.
5. Prepare you bike's wiring to connect to the Posi-Lock™ connectors. Trim back the jacket and measure how much the one wire will need to be in order to have connectors in staggered formation. Attach the other piece of shrink tubing provided with the kit over the wire. (See Figure 1)
6. Connect the negative (black) wire on the fender tip to the negative (black) wire on the bike.
7. Connect the Positive (Red) wire on the fender tip to the positive wire on the bike.
8. Once connections are made, slide both pieces of shrink tubing down over the connectors and using a head gun or similar heat source, shrink the tubing down over the connections.
9. Install the fender tip to the fender with the provided threaded nuts. DO NOT use the stock nuts with this fender tip, they will not work. Make sure you tuck the wiring inside the tip so that it will not get pinched.
10. Re-connect the negative [-] battery terminal to the battery.
11. Test new fender tip, operation is the same as stock running light but with super bright Custom Dynamics® LED's.

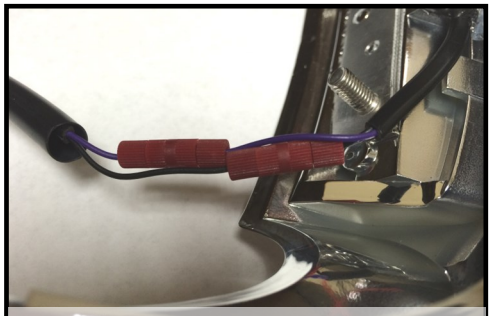

Figure 1 - Staggered Formation

Road King® applications will be a custom installation due to the lack of wiring to the front fender. The wiring will have to be extended to reach a constant power source, preferably to area in the head light bucket. Contact us if you have questions.